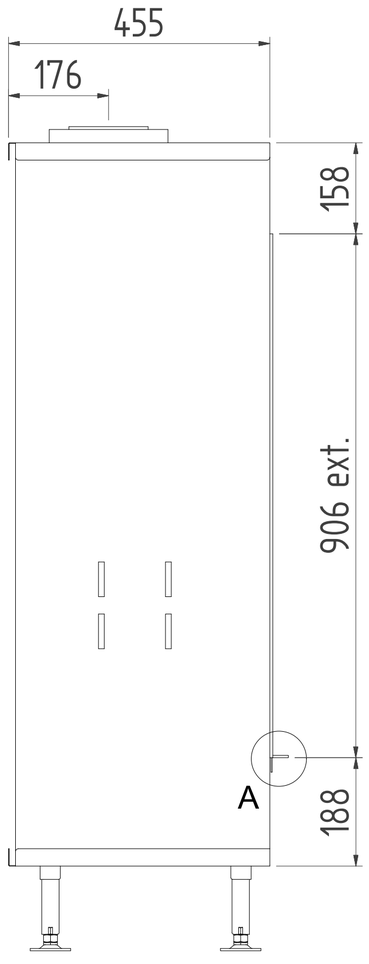

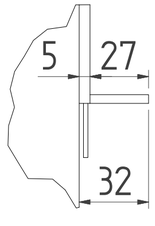

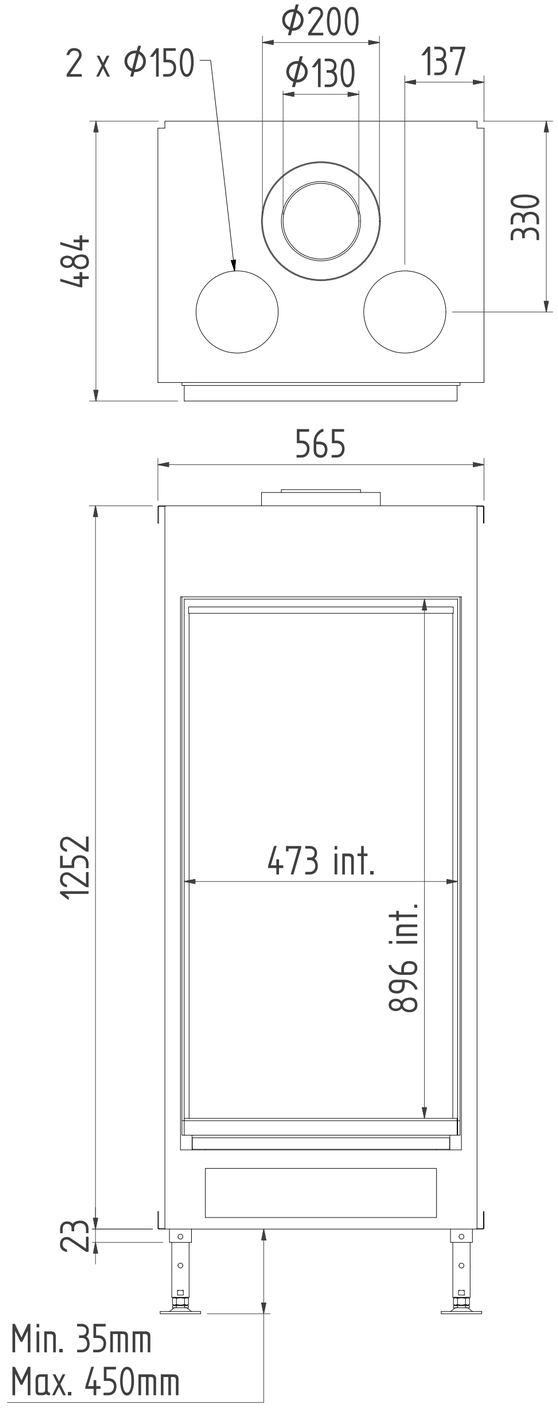

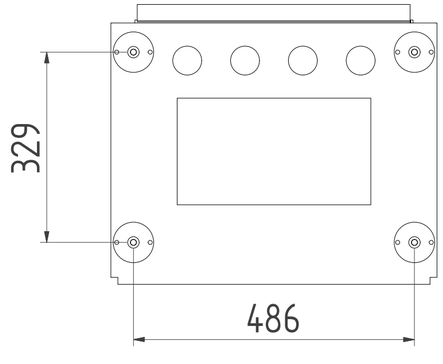

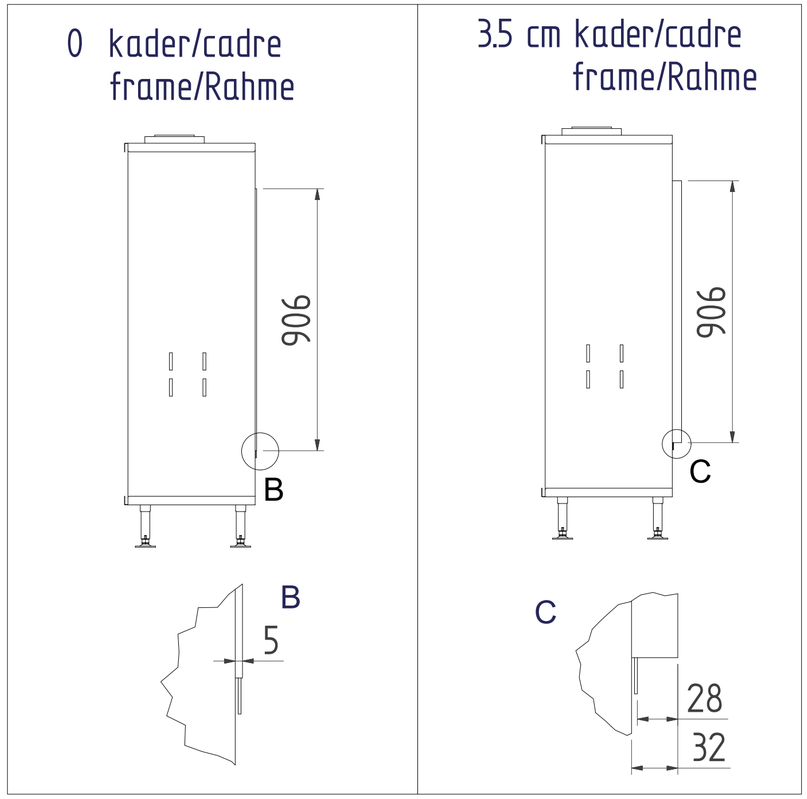

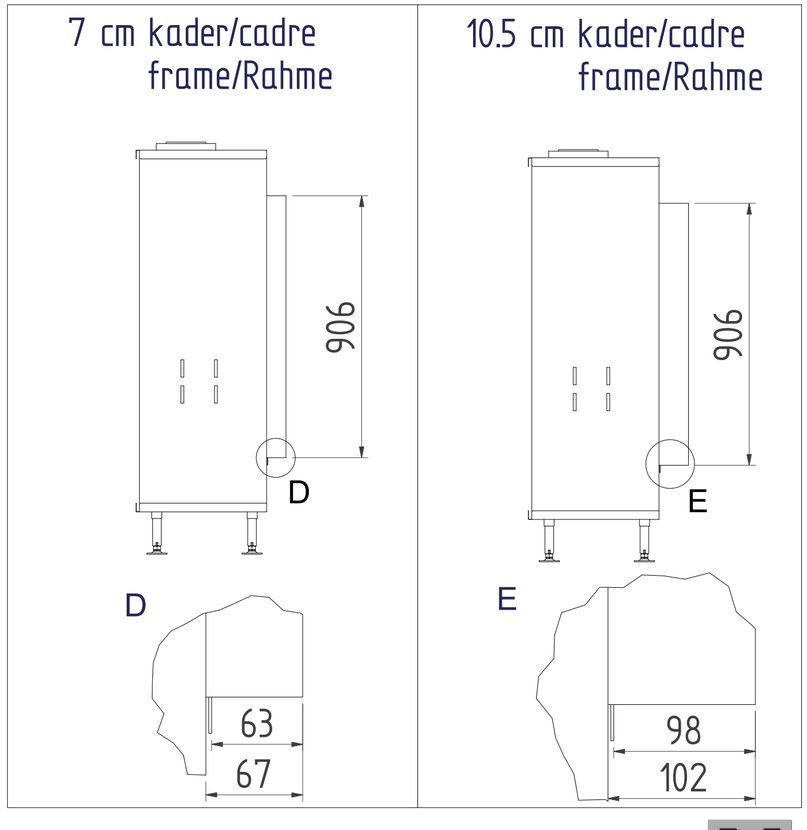

Luna Diamond 550 V Gas/Gaz